SIEMENS

MOBILETT Plus HP

SP

Service

Repair Instruction

Replacement of the inverter

Kit part no. 83 92 727 or
Kit part no. 83 92 784

© Siemens AG 2004
The reproduction, transmission or use of this document or its contents is not permitted without express written authority. Offenders will be liable for damages. All rights, including rights created by patent grant or registration of a utility model or design, are reserved.

English
Print No.: SPR8-220.841.02.01.02
Doc. Gen. Date: 03.04
Replaces: n.a..

Chapter	Page	Revision
All	All	01

Document revision level

The document corresponds to the version/revision level effective at the time of system delivery. Revisions to hardcopy documentation are not automatically distributed.

Please contact your local Siemens office to order current revision levels.

Disclaimer

The installation and service of equipment described herein is to be performed by qualified personnel who are employed by Siemens or one of its affiliates or who are otherwise authorized by Siemens or one of its affiliates to provide such services.

Assemblers and other persons who are not employed by or otherwise directly affiliated with or authorized by Siemens or one of its affiliates are directed to contact one of the local offices of Siemens or one of its affiliates before attempting installation or service procedures.

Page

1 Prerequisites 1 - 1

General . . . . . 1 - 1
Training of customer support engineers . . . . . 1 - 1
Document required . . . . . 1 - 1
Components included in kit 83 92 784 . . . . . 1 - 1
Components included in kit 83 92 727 . . . . . 1 - 2
Tools required . . . . . 1 - 2
Time required for kit 83 92 784 . . . . . 1 - 2
Time required for kit 83 92 727 . . . . . 1 - 2
Safety information . . . . . 1 - 2

2 Work routine for kit 83 92 784 2 - 1

Preparatory work . . . . . 2 - 1
Replace battery boxes. . . . . 2 - 1
Replace battery shelves. . . . . 2 - 3
Install the capacitor unit M11 and replace inverter and PROMs . . . . . 2 - 4
Final procedures. . . . . 2 - 5

3 Work routine for kit 83 92 727 3 - 1

4 Appendix 4 - 1

P08 . . . . . 4 - 1
P16 . . . . . 4 - 1

General

Inverter D13 with part no. 65 08 654 and inverter D13 with part no. 65 28 306 are no longer available. They were replaced by 66 39 335.

Two different spare part kits are available, depending on the type of "old" inverter that need to be replaced.

- Kit part no. 83 92 784 is required when replacing 65 08 654.
  The existing firmware has to be replaced by V1.0H (part no. 70 24 099).
  It is also necessary to equip the MOBILET Plus HP with two extra capacitors. To make room for the capacitors, the battery boxes and battery shelves must be replaced too.
- Kit part no. 83 92 727 is required when replacing 65 28 306.
  The existing firmware has to be replaced by V1.0H (part no. 70 24 099).

Training of customer support engineers

Due to the technology used in this equipment, setup, service and maintenance should be performed only by customer support engineers who have work authorization for MOBILETT Plus.

Document required

Service Instructions for MOBILETT Plus HP.

Components included in kit 83 92 784

Article	Quantity	Part no.
Firmware kit: V1.0H	1	70 24 099
Inverter D13	1	66 39 335
Capacitor unit: M11	1	65 53 767
Battery box	4	65 53 700
Upper battery shelf	1	65 53 692
Lower battery shelf	1	65 53 684
Cable tie	15	65 01 712
Screw	2	62 29 178
Label	1	65 53 676
Repair Instruction (this instruction)	1	SPR8-220.841.02.01.02

Components included in kit 83 92 727

Article	Quantity	Part no.
Firmware kit: V1.0H	1	70 24 099
Inverter D13	1	66 39 335
Repair Instruction (this instruction)	1	SPR8-220.841.02.01.02

Tools required

Standard tool kit.

Time required for kit 83 92 784

Replacement of inverter, firmware, battery boxes, battery shelves and installation of capacitor unit: approximately 2 1/2 hours for 1 person.

Time required for kit 83 92 727

Replacement of inverter and firmware: approximately 1 hour for 1 person.

Safety information

Observe all safety information and protective measures in the document Service Instructions and pay special attention to the notes below.

⚠DANGER

High voltage!

Life-threatening hazard of electric shock. Never work with the system open if the batteries are still connected and the capacitor is charged. If the batteries are connected, the complete system is powered on!

The capacitors in M10 and M11 may still be charged even if the system is switched OFF and the line voltage cable is disconnected.
The capacitors in M10 and M11 must be considered charged until the protective measures listed in the document Service Instructions have been performed.

NOTE	This work routine is for kit 83 92 784 only.

Preparatory work

1. Mains voltage OFF.
2. Discharge the capacitor bank and disconnect the batteries. The procedure is described in the document Service Instructions.
3. Mains voltage ON.
4. Set position 1 on switch S1 located on board D1 to position ON (service mode).
5. Run the service programs P08 (Display the message history) and P16 (Show the exposure counter). The procedure is described in the document Service Instructions. The information in these programs will be lost after the PROMs have been exchanged. Write down the information in the attached tables in chapter "Appendix" and file it under register 10 in the Technical Manual.
6. Mains voltage OFF.
7. Attach the new warning label over the old warning label located behind the back cover.

Replace battery boxes

1. Unplug all KBATT plugs (1/Fig. 1).
2. Remove the screws (2/Fig. 1) and pull out the four battery boxes.

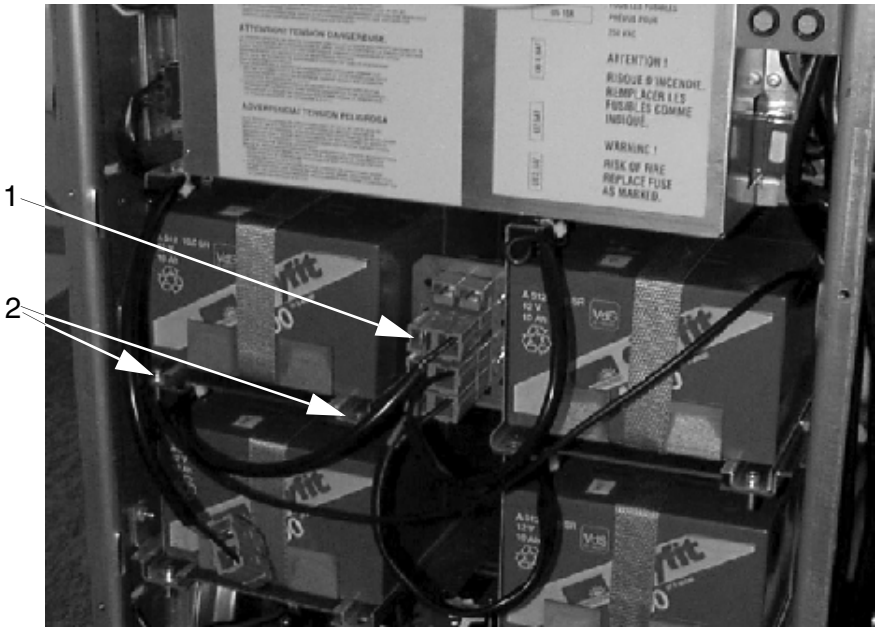

Fig. 1

3. Open the holding belts (1/Fig. 2) and open the battery boxes by loosening three screws (2/Fig. 2).

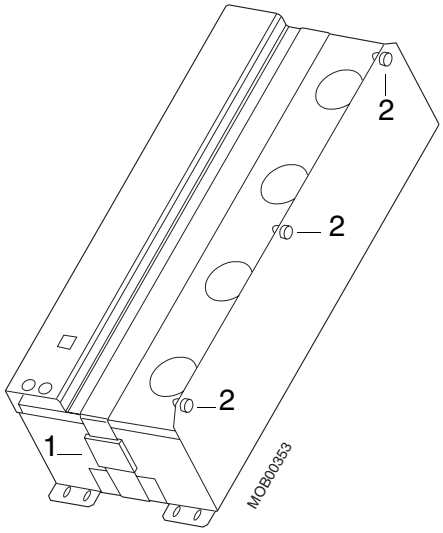

Fig. 2

4.

⚠WARNING	**Life-threatening hazard of electric shock.** **Very high energy is stored in the batteries.** **Do not loosen the jumpers (1/Fig. 3) between the batteries.**

Replace the old battery boxes.
Fasten the old top covers and tighten the holding belts.

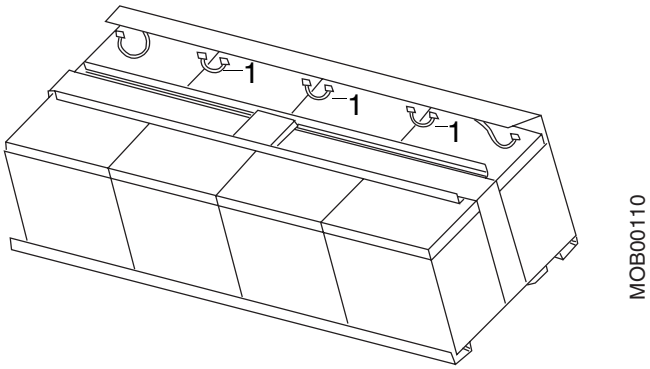

Fig. 3

Replace battery shelves

1. Pull out the power conversion unit (see chapter with same name in the document Service Instructions).

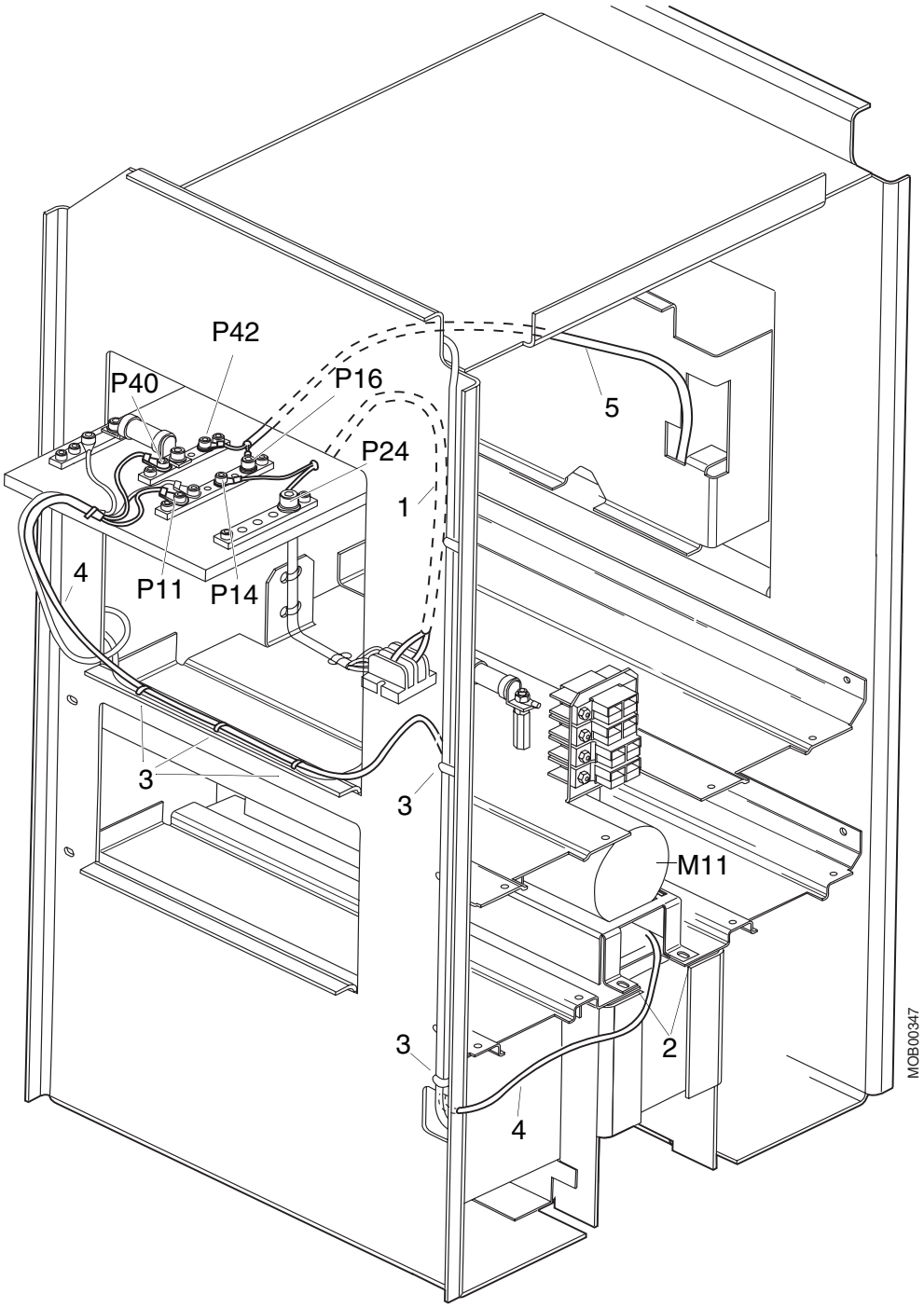

Fig. 4

2. Disconnect cable (1/Fig. 4) from P24 and P14 on the power conversion unit.

3. Cut the cable ties on the upper shelf (1/Fig. 5). Disconnect black cables (2/Fig. 5) and red cables (3/Fig. 5) from the connector (4/Fig. 5).

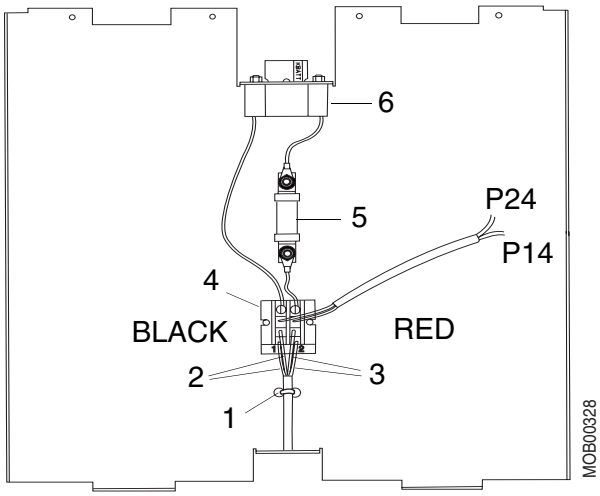

Fig. 5

4. Remove the upper and lower battery shelves from the MOBILETT Plus HP by loosening four screws on each side.
5. Move the fuse (5/Fig. 5), connector (4/Fig. 5) and battery connector (KBATT) (6/Fig. 5) from the old upper battery shelf to the new upper shelf.
6. Insert the new battery shelves and fasten them tight with screws. The heads of the screws must be on the inside of the chassis.
7. Connect the cable (1/Fig. 4) to P14 and P24 on the power conversion unit.
8. Connect the black (2/Fig. 5) and red cables (3/Fig. 5) to the connector on the upper battery shelf and fasten with new cable ties.

NOTICE **Be sure to connect the red and black cables correctly (see Fig. 5). Otherwise the power conversion unit could be damaged.**

9. Insert the battery boxes and fasten them with screws.

Install the capacitor unit M11 and replace inverter and PROMs

1. Insert the capacitor unit M11 and fasten it with screws (2/Fig. 4).
2. Cut cable ties (3/Fig. 4). Connect the cable (4/Fig. 4) to P11 and P40 according to Fig. 4. Fasten with new cable ties.
3. Disconnect cables K8 and K64 on the right-hand side and replace the inverter. Connect cable (5/Fig. 4) to P16 and P42 on the power conversion unit.
4. The PROMs in position I72, I66 and I74 are located on board D1 under the top cover. Replace each PROM with a new PROM marked with the same letters.

Final procedures

1. Mains voltage ON.
2. Set position 1 on switch S1on board D1 to position ON (service mode).
3. Check that the display shows Ver 1.0H.
4. Run the adaptation program P10. The procedure is described in the document Service Instructions. The program is done when PASS is shown on the display. This will take approximately 20 minutes.
5. Set position 1 on S1 to position OFF.
6. Mains voltage OFF.
7. Remount the top, front and side covers.
8. Check the function by making one exposure.

This page intentionally left blank.

NOTE	This work routine is for kit 83 92 727 only.

1. Mains voltage OFF.
2. Discharge the capacitor bank and disconnect the batteries. The procedure is described in the document Service Instructions.
3. Mains voltage ON.
4. Set position 1 on switch S1 located on board D1 to position ON (service mode).
5. Run the service programs P08 (Display the message history) and P16 (Show the exposure counter). The procedure is described in the document Service Instructions. The information in these programs will be lost after the PROMs have been exchanged. Write down the information in the attached tables in chapter "Appendix" and file it under register 10 in the Technical Manual.
6. Mains voltage OFF.
7. Exchange the inverter located on the right-hand side.
8. The PROMs in position I72, I66 and I74 are located on board D1 under the top cover. Replace each PROM with a new PROM marked with the same letters.
9. Mains voltage ON.
10. Set position 1 on switch S1 located on board D1 to position ON (service mode).
11. Check that the display shows Ver 1.0H.
12. Run the adaptation program P10. The procedure is described in the document Service Instructions. The program is done when PASS is shown on the display. This will take approximately 20 minutes.
13. Set position 1 on S1 to position OFF.
14. Mains voltage OFF.
15. Remount the top, front and side covers.
16. Check the function by making one exposure.

This page intentionally left blank.

P08

Appearance number	Message history

P16

Total amount of exposures.....

This page intentionally left blank.